REVO MIG

Operation Manual

Revo MIG SC 2001

Arc Welding & Cutting Equipment

GAAM ELECTRIC

Sales office:

SHARJAH (UAE) office:
Gaam International Group
Sharjah Free Zone (FZC)
No. P6-072, UAE

Tel. +97 (16) 5575516
Fax. +97(16) 5575518

www.gaam.ae
gaam@emirates.net.ae

Contents:

OPM355PD100 2017.02.14

❖ Introduction

Dear customer, we wish to thank you for choosing a **GAAM** product.
In doing so, you have demonstrated us the trust you place in our products.

✵Please read this instruction properly before using of the machine.
Please Follow the welding conditions and maintenance of equipment have been mentioned in this manual to achieve better quality suitable welding and also to ensure longer life of machine.
Attention! For make repairs and after sales service contact with authorized dealers or company repairs unit.

❖ Description

As one of the leaders and having the best name in Middle East and West Asia for the quality and a close cooperation with German company MERKLE and regarding to 30 years successful experience in manufacturing of welding machines and exporting, now we are pleased to introduce a new line of MIG/MAG welding machines.
These machines are suitable for high quality MIG/MAG welding with Steel and Stainless steel and Aluminum wires as well as Flux cored wires. These machines have been designed to work in hard conditions and heavy duty industries specially hot climate. In addition, less energy consumption comparing to other similar machines in market and complying with IEC international standards insures longer life and safety.

■ EXCELLENT FEATURES OF Revo MIG Machine:

- Wide range of action and ability of heavy duty welding
- Suitable for welding steel, stainless steel and aluminium, thick or thin plates, tubes and soon
- Large number of voltage setting makes the desirable voltage possible
- Three different inductor outlets insures optimum welding characteristic
- Robust construction and low depreciation
- Equipped with four wheels and a platform at the back with space for a gas cylinder
- Overload protection

■ EXCELLENT FEATURES OF PARS FEED

- Setting of all welding parameters (voltage, speed, burn back, wire test, gas test) by wire feeder and near to the work piece
- Heavy duty wire feeder plate with 4 rolls with a powerful motor
- The use of ball bearing in the wire feeder provides reliability and long life
- Suitable for solid, flux cored aluminium and stainless steel wires
- High speed up to 20 or 30 m/min
- Control of wire speed by feedback and brake
- Control of " Soft Start"
- Control of " Burn Back " in order to prevent sticking the wire to contact tip or work piece
- Gas test and wire insertion button
- 2 stroke / 4 stroke.
- Ability of post gas (in case of 4 stroke operation)

❖ Technical data

The general technical data of the Revo mig, carry mig, machine have been summarized in table 1

Model	2001
Three phase feeding	3×400 V
Frequence	50/60 H/Z
Fuse	50 A
Current range	25-600 A
Installation power	34.6 KVA
Open circuit voltage	17-55 V
Duty cycle at 100%	450 A
Duty cycle at 60%	480 A
Duty cycle at 25%	600 A
Insulation class	F
Protection class	IP215
Dimensions (L×W×H)	1030*490*910 mm
Weight	163 kg

Table 1

OPM355PD100 2017.02.14

The general technical data of the Wire Feeder system have been summarized in table 2

Model		Pars feed 4520C
Input voltage of feeder		42 V
Rated frequency		50-60 Hz
Power output of feeder motor		90 W
N° rolls		4
Wire diameter		0.8 - 1 - 1.2 - 1.6 mm
Rated wire feeding speed		0,5-20 m/min
Compatible wire types		• Carbon steel • Stainless steel • Aluminum magnesium • Aluminum silicon
Spool	Diameter	300 Ø mm
	Weight	15 kg
Protection gas		• Carbon dioxide • Pure Argon • Argon-Carbon dioxide-Oxygen • Argon and Carbon dioxide blends
Duty cycle at 60%		550 A
Duty cycle at 100%		410 A
Insulation class		F
Motor and control protection grade		IP 21S
Dimensions		41× 24 × 29 cm
Weight		14 kg

Table 2

❖ Usage limits (IEC 60974-1)

The use of a welding machine is typically discontinuous, in fact the working time is made up of effective work periods (welding) and rest periods (for the positioning of parts, the replacement of wire etc.). This welding machine Welding machine is dimensioned to supply an I_2 600A max nominal current in complete safety for a period of work of 25% of the total usage time. The regulations in force establish the total usage time to be 10 minutes. The work cycle is considered to be 25% of this period of time. If the permitted work cycle time is exceeded, an overheat cut-off occurs to protect the components around the machine from dangerous overheating. Messages flashing on the display will warn you when the heat safety device starts working (see paragraph "Error conditions"). After several minutes the overheat cut-off rearms automatically and the machine is ready to use again.

Attention! Do not weld in the rain. This generator has been constructed in compliance with the IP21S protection level.

❖ How To Lift Up The System

Strap the system safely and securely in the slings working from the bottom, then lift up from the ground.

■ **Revo mig**

Has two handles to carry it around manually.

■ **PARS FEED**

The wire-feeder has a handle to be carried

NOTE: The lifting and transporting devices conform to European regulations. Do not use other equipment to lift or transport the feeder

❖ Opening the packaging

■ **ACCESSORIES**

- All welding and control cables including earth clip
- Swivel arm wire feeder

■ **OPTIONAL**

- Four wheels for wire feeder
- Cooling unit
- Water or air cooled torch
- Gas preheater
- regulator
- Spot welding system

❖ How to avoid EMC interference

This welding machine has been made under the Electro Magnetic Accordance. Yet, the user is obliged to install and use this machine according to the manufacturer instruction. When EMC occurs, the user is responsible for finding a suitable way according to the manufacturer's technical instructions. In some cases it's enough to simply connect the welding circuit to the earth. In other cases, it's possible to reduce the

OPM355PD100 2017.02.14

EMC by using an input filter or putting the machine and the work piece back of the protecting wall .Anyway, EMC should be reduced to the maximum extent in order to prevent other electric machine malfunctioning.
Note: The welding current circuit may be connected to the earth or not for security reasons.
No changes must be done in the earth circuit except for an expert confirming that this change has nothing to do with the probability of hazard. For instance paralleling the return current way in some cases may cause the destruction of other machine's earth connecting wire.

■ Installation location Evaluation

Keep the device in a clean and dry location, so that the air can be cross easily. Place the machine at least 0.8 m from the wall, so it can be cooled by air conditioning system.
The installation site for the system must be carefully chosen in order to ensure its satisfactory and safe use. The user is responsible for the installation and use of the system in accordance with the producer's instructions mentioned in this manual.
Before installation of the welding machine, the user ought to inspect the probable problems of using it from EMC aspect. The following issues should be taken into consideration:

- Other cables such as: Control cables, Telecommunication cables and Electric signals which are under, over and around the welding machine.
- Radio and Television Sender and receiver.
- Computers and other signalling machines
- Health of nearby people for instance if they have earphones or artificial heart.
- Measuring and calibration sets
- Protection against other electromagnetic machines EMC around the location of welding. The user ought to investigate other machine's EMC, maybe additional protections become necessary.

■ Radiation Reduction Ways

1. Main power (Power Source)

Welding equipment should be powered according to the manufacturer's instructions. In case of any interference, maybe some other actions become necessary. For instance when using input filters for connecting to the main power, make sure of the stable situation of the power cable and the existence of metallic protecting cable tube or something like that. All parts of the metallic shields of the cable should be connected to each other, this shield must be connected to the body of the welding machine with a complete electric connection.

2. Maintenance of the welding machine

The welding machine must be maintained according to the manufacturer's instructions. When it is on, all the lids and coverings must be kept closed and all the screws should be tightened. No changes other than those mentioned in the manufacturer's instructions are allowed.

3. Welding cables

The welding cables should be as short as possible, on the ground floor, near to each other.

4. Same-potential connections

It is recommended that all metallic parts near the machine be connected to each other. Metallic parts connected to the working piece may cause electric shock in user if hands contact electrodes and those parts simultaneously.
The user must be isolated from all metallic parts electrically.

5. Connection between working piece and the earth

If the working piece for some safety reasons or due to its dimensions or situation is not connected to the earth, (for instance steel structures or outer surface of the ships) in some cases, connect these pieces to the earth for reducing radiations. Make sure that the earth connections do not cause electric shock or any malfunctioning in other electrical machines. Earth connections should be done by direct connection between the earth and working piece when necessary. In those countries which earth connecting is forbidden, this connection should be done by suitable capacitors which are in accordance with the national rules.

6. Shielding

OPM355PD100 2017.02.14

Shielding the rest of cables and machines around the welding machine can reduce the interference problems. In some cases shielding the whole system may be necessary.

■ **Security And Protection Instruments**

This instrument is made in accordance with the IEC standard and other rules related to the electronic engineering and instrumentations.

1. In case of any event it must be separated from the main power.
2. If the electrical voltage increased, it must be off immediately and separated from the main power cable. The instrument must be checked by technical people or the licensable after sale representatives.
3. Before opening the shield it should be disconnected to the main power.
4. Any repair should be done by skillful technicians or the manufacturer after sale services.
5. Before using the machine, all the cables and connections which may cause probable outer damage must be observed with probable Torch problems from physical point of view. While working, the body of user must be protected completely against burn and radiation, by wearing mask and fire proof clothes.
   The prevention rules precisely express that preparing suitable protection tools is in the employer responsibilities and the user of the welding machine is obliged to wear a suitable protecting clothes.
   Long gloves, apron and protecting mask with special welding filters, all according to the standards must be worn. The covers should not be from synthetic materials. The shoes must be completely closed with no holes (for preventing the penetration of the sparks). The protecting cover of head should also be used when necessary.
   For more protection of the eyes against ultra violet rays goggles with side covers must be used. When using goggles, it must be in accordance with the mentioned rules.
6. In order to protect against electric shock due to the connection between powered pieces and the earth, isolation materials must be used. Usage of dry and sound work clothes and long gloves and rubber insole shoes are recommended.
   There must be good ventilation and ventilation systems should be installed and protecting breath mask should be used when necessary.
7. In order to prevent form current deviation and it's negative effects (e.g. corruption of the conductor wire to the earth), the welding current return cable (the working piece cable), should directly be connected to the working piece or working table (like welding table, welding table with metallic network and the like), so that the working piece be completely connected to it. Make sure of the complete electric connection when connecting to the earth (any paint or rust or the like should be removed from it).
8. When there is a long pause in welding operation, the machine should be switched off and the air faucet should be closed.
9. In no circumstances when the shield of the welding machine is open, the machine should not be switched on (e.g. for repairing) because other than safety rules, efficient cooling of electronic parts cannot be guaranteed.
10. According to the rules, those who are near to the welding place, should be warned and protected from the probable hazards. Particular welding partitions (particular protecting welding curtains) shall be used.
11. Do not weld over the tankers which carry gas, fuel, oil or such a material. Even if there is a long time of their evacuation (for the probability of fire or explosion).
12. Welding with high current necessitates observing particular rules which should only be done by the trained and experienced welders.
13. Never close Torch to face.
14. In those environments with high potential of fire, the welder should obtain the required licenses and keep them during all the working time and a fireman should make sure of the immunity of the environment after work.

OPM355PD100 2017.02.14

15. Special perditions must be done for air ventilation.
16. This warning for protecting the eyes should be installed on a wall near welding place: Do not look directly to the electric arc.

Welding power sources when they are in their most unstable position shall not topple over when tilted up 10˚.

❖ Connecting the Wire-Feeder/ Power Source interconnection cable

This cable connects the welding machine to the wire-feeder.

WARNING: Do not disconnect the wire-feeder until the machine has been switched off (see paragraph "Error conditions").

Direct-polarity welding

Connect the interconnection cables (power cable, ancillary wiring and gas tube) to the special attachments and couplings shown in Fig.1.

The delivery (blue colored) and return (red colored) water tubes, used for cooling the torch of the welding machine, are part of the interconnection cable and should be connected as follows:

• Interconnection cable on generator side: connect up the hoses to their rapid couplings (blue and red colored) at the back of the coolant system;

• Wire feeder side connecting cable: connect the red and blue hoses to their respective fittings on the rear panel of the feeder (Fig. 1).

❖ Connecting the welding cables

■ MIG-MAG Welding

To start MIG-MAG welding, make the connections as shown in figures 1 and 2, more precisely (while the machine switched off):

• connect the generator - feeder connecting cable as shown in figure.1. Gas cylinders are supplied with a pressure reducer to adjust pressure of the gas used for welding;

• connect the earth cable to the rapid coupling marked by a - (negative) symbol and then the relevant earth clamps to the piece being welded or to its support in an area free from rust, paint and grease (Fig. 2).

Using particularly long earth cables reduces the voltage and causes some problems from increased resistance and inductance of the cables that could cause faulty welding. Follow instructions to avoid these problems:

- use earth and extension cables with appropriate section;
- lay out the cables as flat as possible to prevent them from coiling up.

OPM355PD100 2017.02.14

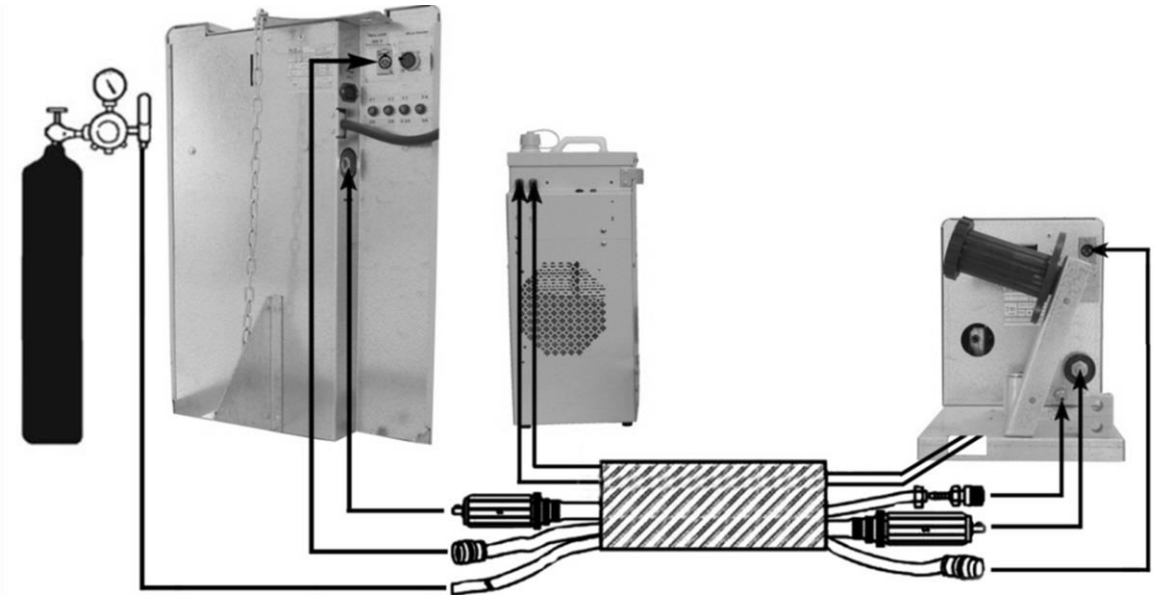

Figure.1

• screw the torch power cable to the centralized attachment on the front panel of the wire-feeder and connect the delivery (blue colored) and return (red colored) water hoses to their rapid couplings (blue and red colored) located on the front panel of the wire-feeder

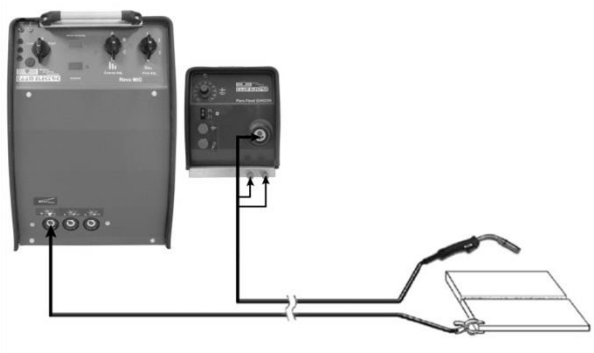

Figure.2

❖ Connecting the machine to the electrical supply

Connecting the machine to the user line (electrical current) must be performed by qualified personnel.
Before connecting the machine to the electrical supply, check that the machine's rating plate corresponds to the supply voltage and frequency and that the lines switch of the machine to being placed in the "O" position.
Connect the machine to industrial mains only and not to the electricity supply for general public.
Proceed as follows when you want to install a plug on the cable:

• 3 conducting wires are needed for connecting the machine to the supply;

• The fourth which is YELLOW GREEN in color is used for making the "EARTH" connection.

• Connect a suitable load of normalized plug to the power cable and provide for an electrical socket complete with fuses or an automatic switch. The earth terminal must be connected to the earth conducting wire (YELLOW- GREEN) of the supply

Table 3 shows the recommended load values for retardant supply fuses chosen according to the maximum nominal current supplied to the machine and the nominal supply voltage.

Model		2001
I2 Max nominal 25%		600 A
Installation power		34.6 KVA
Rated current of delayed fuses		50 A
Supply connection cable	Length	2 m
	Section	4*6 mm^2

Table.3

❖ Loading wire

• Open the side panel and fit the reel (diam. 300 mm) on the support so that the wire unrolls clockwise.

• Thread the end of the wire into the back guide (1, Fig. 3).

• Lift up the idle rollers (8, Fig3) after releasing the roll pressure device. Make sure that the drive rollers (3, Fig. 3) have the grooves corresponding to the wire being used Wire diameter stamped on the drive rollers.

• Thread the wire into the central wire guide (9, Fig. 3) and into the wire guide of the centralized attachment (central adaptor) (4, Fig. 3) for a few centimeters. Lowering the idle roller holder arm ensures the wire goes into the slot of the drive rollers. If necessary, adjust the pressure between the rollers with the screw provided (5, Fig. 3). The correct pressure is the minimum that does not allow the rollers to skid on the wire. Excessive pressure will case deformation of the wire and tangling on the entrance of the sheath and insufficient pressure can cause irregular welding.

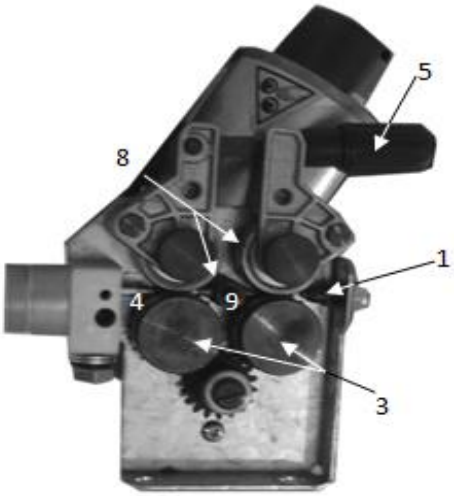

Fig.3

■ **Assembly of drive rollers for steel**

Unscrew the screw (3, Fig. 3) and remove the safety guard of the gearing (7, Fig. 3). Lift up the idle roller holder arm (5, Fig. 3) and proceed as follows:

• Each roll shows the type and diameter of wire on its two external sides.

• Install the rollers correctly make sure the groove is in the correct position for the diameter of the wire being used.

• Mount the gearing safety guard again

■ **Assembly of drive rolls for aluminum**

■ **Removing existing rolls**

Unscrew the locking journal with a special spanner and extract the bearing together with the spacer

■ **Aluminum roll kit assembly**

Insert idle roll into the geared support and lock everything onto the arm with the new locking journal. The remaining rolls go to replace those already existing.

❖ Command and control units of Revo MIG

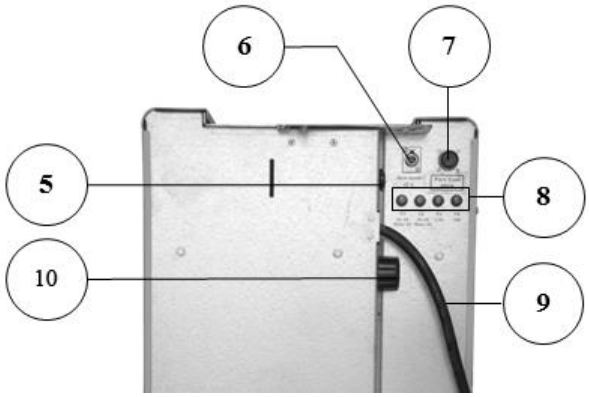

Figure.4

1. Control panel.
2. Fast coupling straight polarity. (L)
3. Fast coupling straight polarity. (M)
4. Fast coupling straight polarity.(H)
5. Connector for Gas heater.
6. Weld auxiliary control connector.
7. Power connector for cooling system.
8. Fuses.
9. Supply cable
10. Fast coupling reveres polarity

OPM355PD100 2017.02.14

❖ Command and control units of Wire Feeder system

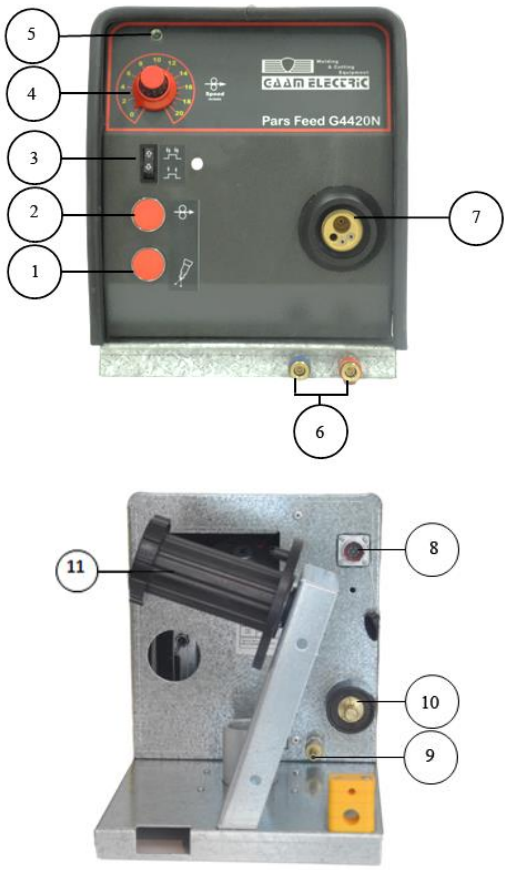

Figure.5

1. Gas Test
2. WIRE TEST
3. Welding Mode Selection Key: 2T ,4T
4. Potentiometer for adjusting welding current
5. Indicator Light for input main
6. Rapid couplings for cooling system of the torch
7. Centralized torch connection (Central Adaptor)
8. Weld connectors auxiliary control
9. Gas fitting
10. Fast coupling reverse polarity.
11. Spool holder (Reel Hub)

❖ Control panel of Revo MIG

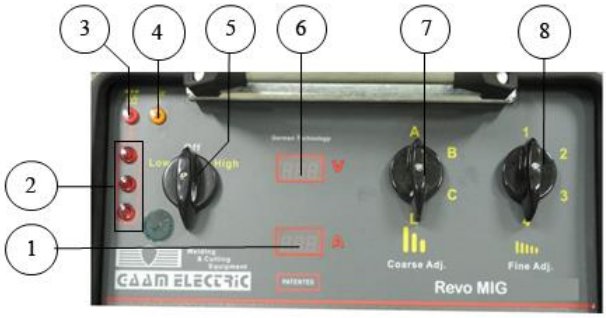

Figure.6

1. Digital ammeter indicator of welding current
2. Indicator Lights for input main feed
3. Indicator lights for pressure swith
4. Inicator Light for thermo swich operation
5. Main swich ON/OFF
6. Digital volt meter indicator of arc voltage
7. Selector for adjusting fine are voltage (Fine adjustment)
8. Selector for adjusting fine are voltage limits (Corse adjustment)

❖ Welding Procedures

■ MIG-MAG Welding

The following jobs must be done on the wire-feeder before starting to weld:

- Remove the contact tip from the torch so that the end of the wire can freely come out. Remember that the contact tip must correspond to the wire diameter;
- Adjust the potentiometers on the front panel to required values;
- Push the torch push button or the motor check push button until the wire end comes out from the torch;
- Tighten the contact tip on the torch;
- Open the gas cylinder valve slowly and adjust the pressure regulator to obtain about 1,3 - 1,7 bar;
- Push the gas testing key and adjust the flow between 14 and 20 l/min according to the current being used for welding;
- The welding machine is now ready to be used.
-

■ Aluminum welding

To weld with aluminum wires proceed as follows:

Replace the drive rollers with special ones for aluminum wire (see paragraph: "Assembly of Drive Rollers for aluminum");

- Use a 3 meters torch with a corresponding Teflon liner;
- Set the pressure between the rollers at the minimum by turning the screw provided
- Use argon gas at a pressure of 1.3 - 1.7 bar

❖ Maintenance

WARNING: Before carrying out any inspection of the inside of the generator, disconnect the system from the supply.

■ Revo mig

WARNING: It is very important to remove all dust sucked into the machine by the fans, as it's completely electronic.

Proceed as described to keep the machine in good working order:

• Periodic removal of accumulated dirt and dust from the inside of the generator, using compressed air. Do not aim the air jet directly on to the electrical components, in order to avoid damaging them.

• Make periodical inspections in order to individuate worn cables or loose connections that are the cause of overheating.

■ Wire Feeder

The maintenance of this equipment is limited to the cleaning of the inside of the frame and periodic inspection of worn cables or loose connections. At regular intervals disconnect the welding machine from the mains, take off the cover and use dry compressed air to remove possible accumulations of dirt and dust. During this operation do not direct the jet air onto electronic components. Check, that the gas circuit is completely free from impurities and that the connections are tight and that there are no leaks. Carefully check that the electric valve does not leak. Check the wire feeder rollers periodically and replace them when wear impairs the regular flow of the wire (slipping etc.).

■ Torch

The torch is subjected to high temperatures and is also stressed by traction and torsion. We recommend not to twist the wire and not to use the torch to pull the machine. As a result of the above the torch will require frequent maintenance such as:

• Cleaning welding splashes from the gas diffuser so that the gas flows freely;

• Substitution of the contact point when the hole is deformed;

• cleaning the wire guide liner using trichloroethylene or specific solvents;

• Checkup the insulation and connections of the power cable;

• The connections must be in good electrical and mechanical condition.

❖ Troubleshooting

General Check:

- Input three phases line of switch board to the machine (fuse, plug, etc).

- That welding cable and control cable are not damaged.

OPM355PD100 2017.02.14

- That wire speed knob and voltage selectors are in correct position.
- That there is enough pressure in bottle and determined flow of gas after regulator

1. Machine does not operate after switching.
- Make sure of all input three phases. F_1 fuse or F_2 fuse (6A) is breaking.
- Problem in water cooled system.

2. Machine dose not react after switching the torch.
- Check control cable (between rectifier and wire feeder) Probably F4 fuse (10A) is faulty
- Problem in the torch switch or that circuit.
  - The wire feeder PCB is faulty.

3. The wire feeder unit is active but there is no welding current.
- The contactor is reactive.
- The earth welding cable has not perfect contact to work piece. Fix it or change if required or if the work piece is dirty, clean it.
- Faulty main transformer.

4. Welding quality is not good.
- Adjustment of voltage, wire speed or specially connections of inductance, not correct.
- Flow of gas is low or gas is not flowing check the solenoid valve is working well.
- The gas preheater is active When using of CO2 gas)
- Poor quality of gas, air is mixed with the gas.
- Gas nozzle or gas diffusers are covered with spatters.
- The work piece is oxidized or oily.
- Air is inside welding area because of wind.

5. The welding penetration is low and spatter is high.
- Adjustment of voltage, wire speed or specially connections of inductance, not correct.
- One phase is missed.
- Check input voltage is ok..
- Rectifier bridge is faulty.

6. Problem with wire feeding and wire send out.
- Diameter of wire is not in accordance with roll.
- Contact tip diameter is not correspond to wire or is faulty to wire or is faulty.
- Welding wire is not in the axis of the drive roller.
- The drive rollers are old.
- Pressure at drive rollers is not suitable.
- Liner is dirty or broken or too short. (in case of Aluminum there is Teflon stead of liner)

7. After cut off the torch button, welding wire sticks to nozzle or work piece. (This happens, specially if you change wire material)
- Burn back potentiometer (RTS) is not adjusted.

8. Fan does not work properly but operation of machine is right.
- Capacitor or motor of fan is faulty.

❖ Meaning of the symbols written on the power source and on the Wire-Feeder

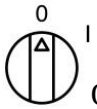

On/off switch

System for use in environments with


Product suitable for free circulation in the European Community


Danger! High voltage


Grounding protection


Danger! Moving Parts


It is forbidden to use gloves


Grounding


Fuse


Before using the equipment you should carefully read the instructions included in this manual


Connector for entering an external peripheral device (pc, modem tc)


Motor testing


Gas testing


Arc length adjustment

Adjustment of the welding current

Positive pole snap-in connector

Negative pole snap-in connector


Warning!

OPM355PD100 2017.02.14

❖ Meaning of the graphic symbols on Rating Plate of the Power Source

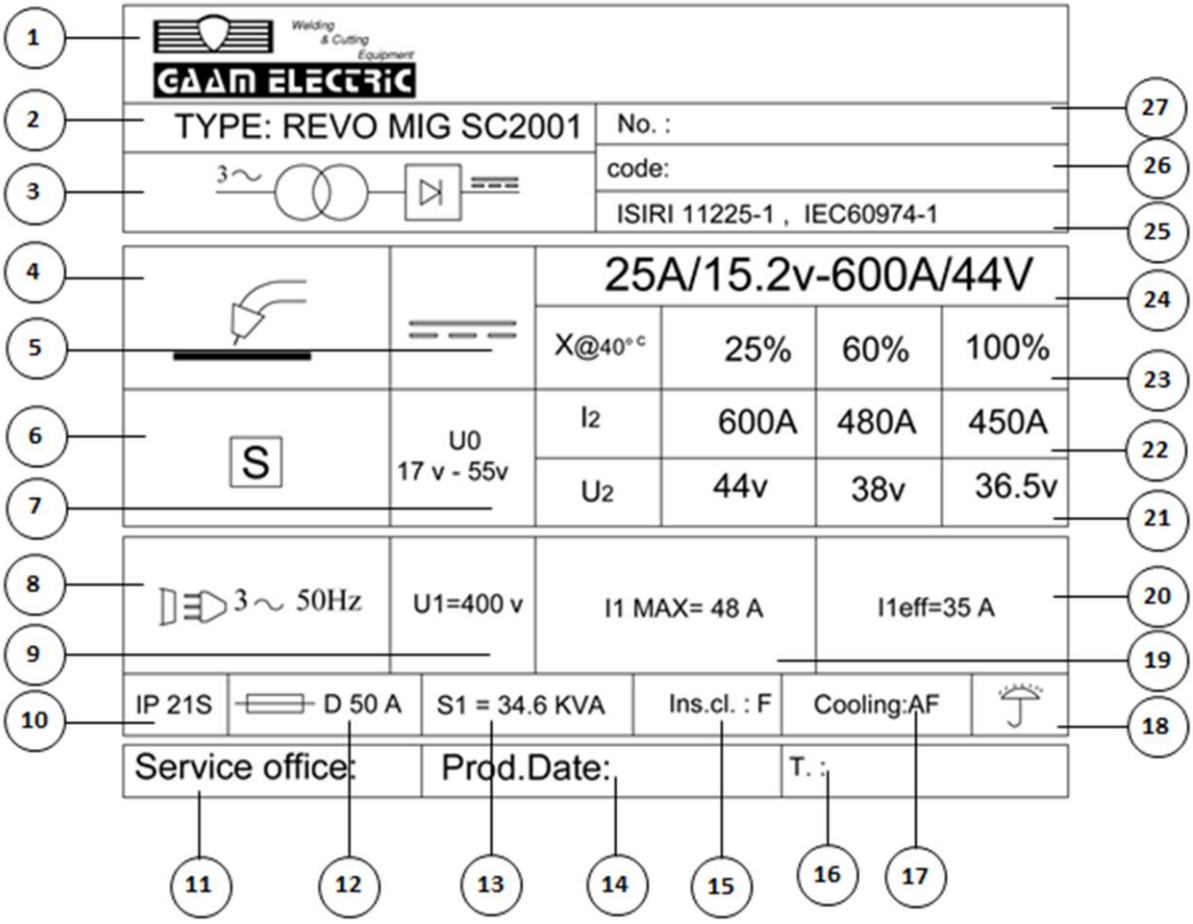

1	Name and address of manufacturer	15	Insulation class
2	Name of system	16	Product Time
3	Three-phase with semiconductor rectifier	17	Forced air cooling
4	MIG/MAG welding processes	18	Do not weld in rain
5	Continuous welding current	19	Maximum value of input current
6	Protection the operator from the Electric Eclipse Voltage according to IEC 60974-1	20	Maximum value of effective input current
7	Secondary no-load voltage	21	Nominal welding voltage
8	Mains power supply, number of phases, nominal supply frequency	22	Nominal welding current
9	Nominal supply voltage	23	Duty cycle
10	Degree of protection of casing	24	Minimum and maximum of welding voltage & current
11	Service Office	25	The reference of standards no.
12	Nominal current of delayed fuse	26	Code
13	Maximum power	27	Serial number of device
14	Product Date		

❖ Meaning of the graphic symbols on the Rating Plate of the Wire Feeder System

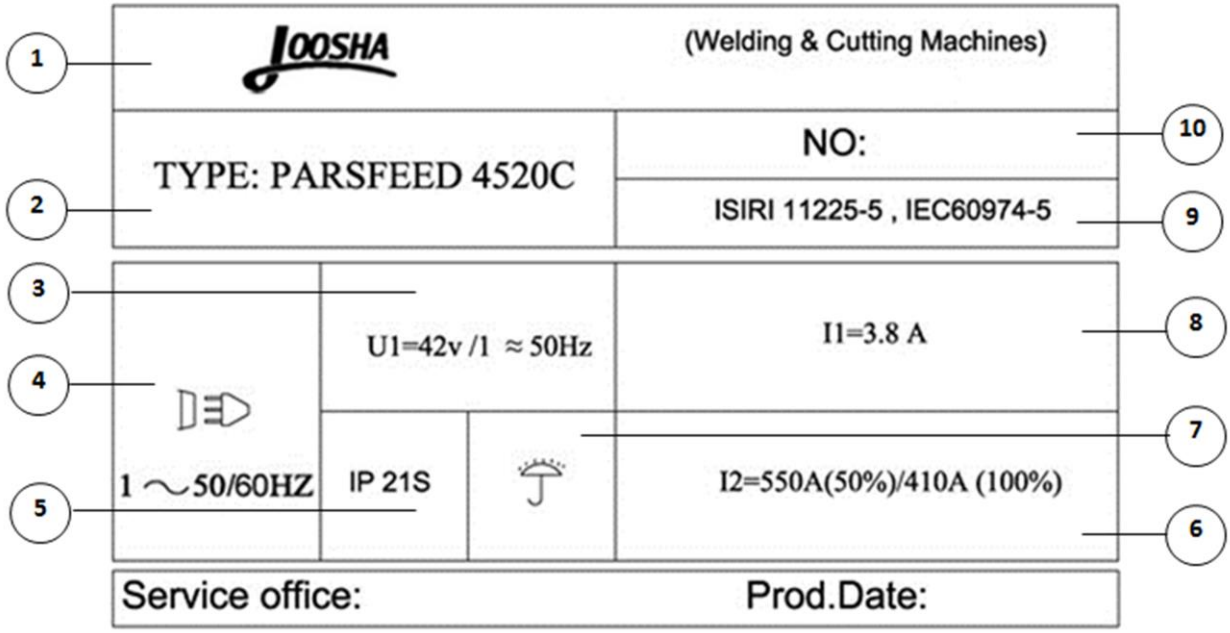

1	Name and address of manufacturer	6	Nominal welding current(Duty cycle)
2	Name of system	7	Do not weld in rain
3	Mains rated voltage	8	Maximum value of rated supply current
4	Mains power supply and nominal supply frequency	9	Reference standards
5	Degree of protection of casing	10	Serial number

❖ Using of warranty

1- This warranty is valid due to proper use of the machine.

2- Cost of parts or replace or repairs of all of parts except vented, voltage adjustment and on/off switches, connectors, potentiometer and knob, ammeter, voltmeter and parts of torch or central connector is free of charge. Technical problems due to events such as thump, fire, water and over voltage does not cover this warranty.

3- Repairing and correcting any type of technical problem must done with authorized person, The warranty becomes invalid if repairs are undertaken by unauthorized person (unauthorized persons are whom that do not finished maintenance course of the machine in Gaam company and do not have our certificate).

4- Warranty card demonstration to authorized person is necessary for using of warranty benefits.

5- The warranty becomes invalid if warranty card serial number be incompatible with machine serial number.

6- In warranty period cost of transferring machine to the factory and cost of repair men in another place except factory should be paid by costumer.

7- Warranty of the product is for 1 year, from the date of purchasing that in the first 6 months spare parts and service are free of charge (due to the above items mentioned) and in the second 6 months service is free of charge and after that till 10 years services after sales of the product is not free of charge (should be paid).

Ordering spare parts:

Spare parts can be ordered through Gaam sales office. To ensure deliver of the correct parts, please state type designation of machine, serial NO, and Part Name (Description) and part number, according to the parts list. This will expedite delivery of the ordered items.

❖ Sales office:

SHARJAH (UAE) office:
Gaam International Group
Sharjah Free Zone (FZC)
No. P6-072, UAE
Tel. +97 (16) 5575516
Fax: +97(16) 5575518

OPM355PD100 2017.02.14

❖ Spare Part List

Row	description	Part NO.
1	Red Signal Lamp, 220V	10211
2	Cable 4 x 4mm^2 with Green - Yellow wire for earth	11185
3	Cable 4 x 6mm^2 with Green – Yellow wire for earth	11186
4	Selector Switch, 3-Phase, 0-7, 25A, A25CM038/2 or 25S27	14125
5	Selector Switch, 3-Phase, A25CM34, 25S56	14148
6	Instruction Manual for RevoMig	15165
7	Earth Clamp 500A, 3m Size: 50mm^2 without cable and connector	18112
8	Female Fixed Welding Connector 50-70	18132
9	Male Cable Welding Connector 50-70	18133
10	Hook for Lifting Machine, Size: M16*23	18165
11	Fan Protector Net, Dia=40cm	18180
12	Fan, Dia=40cm	18181
13	Rotating Wheel, Built-in Axle, Dia=16cm	18210
14	Fixed Wheel, Dia=16cm	18215
15	Complete Wiring for MIG 403-503, Ducer Adapted	18319
16	PCB, W228X	25409
17	Auxiliary transformer , T320MAXXX	29956
18	Contactor, 24V, 15kW (D32)	30352
19	Fuse Holder, Short, Cruze Type	CE---01113
20	Female Fixed Quick Connector, Y Socket	Wf 20k7zz1
21	Male Cable Connector3-Pin, Computer Type	CE-CA-6028
22	Female Fixed Connector, 3-Socket, Computer Type	CE-CA-6031
23	Electromotor, 75W-1250U / min	D-115489
24	Power Bridge, PTS/48/6/2 for MIG machines	PTS/48/6/2
25	Lifting eyelet	18165
26	Thermo Switch, 110°C	S011100501
27	PCB Board W512B	11079

❖ Spare part list of Pars Feed 4520C

Row	description	Part NO.
1	Electromotor gearbox with chasis, 90W , G4520C , w/old Central / Assembled	19212
2	Hose Head, Size: 1/8"x6mm, Outer Thread	12136
3	Gearbox for potentiometer , M9 x 0.75	12541
4	PCB , PAN465VX.XX	13980
5	Two - Position switch , Cruze Type	15006
6	Solenoid Valve, 42V	15026
7	Push Button, Start, Green	15240
8	Potentiometer, 5 K ohm, DP Type	15590
9	Male fix connector 12 pin , P32	18120
10	Male Fixed Welding Connector 50-70	18131
11	Reel hub for wire feeder	18272
12	Big Spacer for ball bearing , inner 8mm , outer 8.5mm , 1113 , GM305 , 403 , 405 Type	18502
13	Small Spacer for ball bearing , inner 8mm , outer 4.5mm , 1114 , GM305 , 403 , 405 Type	18503
14	Nut for Protecting sheet , M6	18504
15	Axle for Lateral Gear / GM305 , 403 , 405 Type	18517
16	Hose Head with Separate Nut, Size: 1/4"x1/8"	20009
17	Brazen 2-ways Part, Size: 1/4"x1/8"	20011
18	Protector for Central , G4 Type	20445
19	Inlet Wire Guide / GM305, 403, 405 Type	20479
20	Ball bearing, No. Z2 6301	20507
21	Axle for ball bearing holder , 1161 , GM305 , 403 , 405 Type	20528
22	Central Gear / GM305, 403, 405 Type	20591
23	Drive Roller Holder w/ Gear	20592
24	Wire Guide Holder	20595
25	Axle for ball bearing , GM305 , 403 , 405 Type , 1115	20596
26	Aluminum Ball bearing Holder, Right Side / GM305, 403, 405 Type	20597
27	Aluminum Ball bearing Holder, Left Side / GM305, 403, 405 Type	20598

Row	description	Part NO.
28	Rolled Spring for lever , GM305 , 403 , 405 Type	25420
29	Auxiliary Transformer , TF25AUXXX	30127
30	Knob for Potentiometer without Pointer, Big Type	7.458.220-RC
31	Electromotor For Wire feeder , 90W, 42V, 210 RPM	EL-0100705
32	Hose Head with Female Quick Connector 1 / 8G + Red Gland, Dia=8mm	T-FA3076
33	Hose head with female quick connector 1/8G + blue gland , Dia. = 8mm	T-FA3086

IMPORTANT:

Before starting the equipment, read the contents of this manual, which must be stored in a place familiar to all users for the entire operative life-span of the machine. This equipment must be used solely for welding operations.

❖ Safety precautions


Welding and arc cutting can be harmful to yourself and others. The user must therefore be educated against the hazards, summarized below, deriving from welding operations.

NOISE


This machine does not directly produce noise exceeding 80dB. The plasma cutting/welding procedure may produce noise levels beyond said limit; users must therefore implement all precautions required bylaw

ELECTRIC AND MAGNETIC FIELDS

- May be dangerous.


Electric current following through any conductor causes localized Electric and Magnetic Fields (EMF). Welding/cutting current creates EMF fields around cables and power sources. The magnetic fields created by high currents may affect the operation of pacemakers. Wearers of vital electronic equipment (pacemakers) should consult their physician before beginning any arc welding, cutting, gouging or spot welding operations.· Exposure to EMF fields in welding/cutting may have other health effects which are now not known. All operators should use the following procedures in order to minimize exposure to EMF fields from the welding/cutting circuit:

Route the electrode and work cables together secure them with tape when possible.

- Route the electrode and work cables together secure them with tape when possible.
- Never coil the electrode/torch lead around your body.
- Do not place your body between the electrode/torch lead and work cables. If the electrode/torch lead cable is on your right side, the work cable should also be on your right side.
- Connect the work cable to the work piece as close as possible to the area being welded /cut.
- Do not work next to welding/cutting power source

EXPLOSIONS


Do not weld in the vicinity of containers under pressure, or in the presence of explosive dust, gases or fumes. All cylinders and pressure regulators used in welding operations should be handled with care.

❖ Warning label

The following numbered text corresponds to the label numbered boxes.

B. Drive rolls can injure fingers.

C. Welding wire and drive parts are at welding voltage during operation — keep hands and metal objects away.

1. Welding or Cutting sparks can cause explosion or fire.

1.1 Keep flammable materials away from cutting or welding.

1.2 Welding or Cutting sparks can cause fires. Have a fire extinguisher nearby, and have a watchperson ready to use it.

1.3 Do not weld or cut on drums or any closed container.

2. The welding or cutting arc can cause injury and burns.

2.1 Turn off power before disassembling torch.

2.2 Do not grip material near welding or cutting path.

2.3 Wear complete body protection.

3. Electric shock from torch or wiring can kill.

3.1 Wear dry insulating gloves. Do not wear wet or damaged gloves.

3.2 Protect yourself from electric shock by insulating yourself from work and ground.

3.3 Disconnect input plug or power before working on machine.

4. Breathing welding or cutting fumes can be hazardous to your health.

4.1 Keep your head out of fumes.

4.2 Use forced ventilation or local exhaust to remove fumes.

4.3 Use ventilating fan to remove fumes.

5. Arc rays can burn eyes and injure skin.

5.1 Wear hat and safety glasses. Use ear protection and button shirt collar. Use welding helmet with correct shade of filter. Wear complete body protection.

6. Become trained and read the instructions before working on the machine or cutting.

7. Do not remove or paint over (cover) the label.